SNS COLLEGE OF TECHNOLOGY
(AN AUTONOMOUS INSTITUTION)
COIMBATORE-641035.

DEPARTMENT OF ELECTRONICS AND COMMUNICATION ENGINEERING

PROJECT PHASE – I
Metro Tunnel Safety Monitoring System Using ESP32

Project Guide : Mrs.Suriya K (Assistant Professor /ECE)

Team Members: 713522EC115– Samraaj M

713522EC148 – Vishhal JP

713522EC150 – Vishnuvikash S

713522EC151 – Yazhini P

PROBLEM STATEMENT

In metro tunnel environments, ensuring passenger and worker safety is a major challenge due to risks like gas leakage, fire, abnormal temperature, and structural vibrations. Traditional monitoring methods often rely on manual inspection or costly wired systems, which cause delays in hazard detection and lack real-time data accessibility. Such limitations increase the chances of accidents and reduce the efficiency of emergency response. Therefore, there is a strong need for a low-cost, IoT-based tunnel monitoring system that can provide continuous real-time safety data. An ESP32-based solution can address these issues effectively with wireless connectivity and sensor integration.

RELEVANCE

The relevance of this project lies in improving the safety and reliability of metro tunnel operations. Tunnels are enclosed environments where even minor hazards like gas leakage, smoke, or structural vibrations can quickly turn into serious accidents. Traditional safety systems are often expensive and lack real-time monitoring capabilities. By using ESP32 with IoT sensors, this project provides a cost-effective and efficient solution. It enables continuous data collection, instant alerts, and quick response during emergencies. Thus, the system plays a vital role in ensuring passenger safety and supporting modern smart metro infrastructure.

OBJECTIVE

AIM:

The aim of this project is to design a smart safety monitoring system for metro tunnels using ESP32. It focuses on real-time detection of hazards such as gas leakage, smoke, abnormal temperature, and vibrations. The system ensures quick alerts and preventive measures to enhance passenger and worker safety.

GOALS:

- To continuously monitor environmental parameters inside metro tunnels using IoT sensors.
- To transmit real-time data and alerts through ESP32 with wireless connectivity.
- To provide a cost-effective, scalable, and efficient safety solution for metro infrastructure.

LITERATURE SURVEY

PROJECT	REFERENCE
1. IoT-Based Underground Safety Monitoring	*Reference:* Singh, A. et al., *"IoT Based Monitoring of Underground Environment for Safety Applications"*, International Journal of Engineering Research, 2017.
2. ESP32 for Real-Time Sensing Applications	*Reference:* Kumar, P. et al., *"Design and Implementation of ESP32 Based IoT System for Environmental Monitoring"*, IEEE International Conference on IoT, 2019.
3. Gas and Smoke Detection in Enclosed Environments	*Reference:* Zhao, L. et al., *"Development of Gas and Smoke Detection Systems for Underground Safety"*, Sensors, 2018.

LITERATURE SURVEY

PROJECT	REFERENCE
4. Wireless Communication in Tunnel Safety Systems	*Reference:* Raj, S. et al., *"Wireless Sensor Network Applications in Tunnel Monitoring and Safety"*, IEEE Access, 2020.
5. Cloud Integration for Real-Time Monitoring	*Reference:* Mehta, R. et al., *"IoT and Cloud Based Real-Time Data Monitoring Systems"*, International Journal of Computer Applications, 2021.

EXISTING CONCEPT

- **Manual Inspection Systems** – Safety in tunnels is often ensured by periodic manual checks, which are time-consuming and may delay hazard detection.
- **Wired Monitoring Systems** – Some tunnels use wired gas, smoke, and temperature sensors, but they are expensive to install and maintain.
- **CCTV Surveillance** – Cameras are used for visual monitoring, but they cannot detect environmental hazards like gas leaks or humidity.
- **Alarm-Based Systems** – Traditional alarm systems trigger only when a hazard is detected locally, lacking remote monitoring or early warning.
- **Wireless Sensor Networks (WSN)** – Used in mines and underground environments, but they often face issues with high power consumption and limited data processing.

PROPOSED CONCEPT

•The ESP32 microcontroller is used as the central unit with built-in Wi-Fi for connectivity.

•Different sensors are connected to detect gas, smoke, temperature, humidity, and vibrations. Collected data is transmitted wirelessly to a cloud dashboard or mobile application.

•The system generates instant alerts and alarms when safety limits are crossed. It offers a low-cost, energy-efficient, and easily scalable solution for metro tunnels.

•Ensures continuous monitoring and quick response to improve passenger safety.

BLOCK DIAGRAM

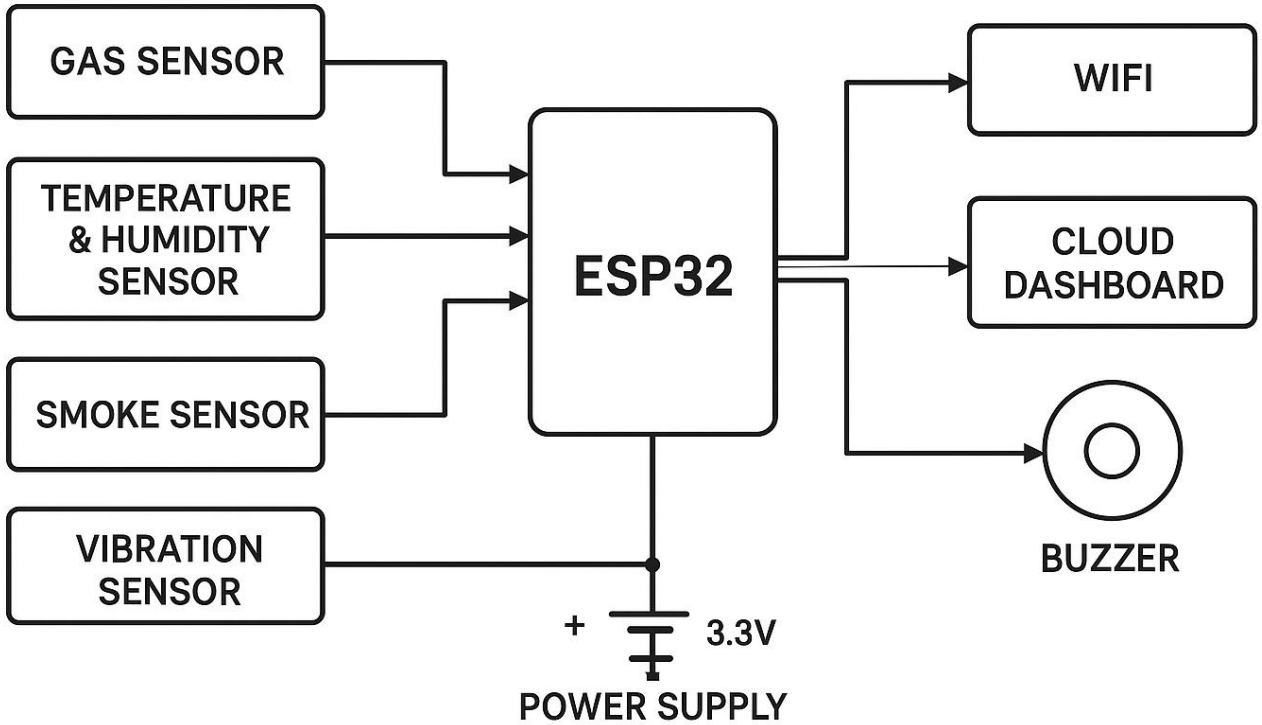

EXPECTED OUTCOMES

- Real-time monitoring of tunnel conditions.
- Quick detection of gas, smoke, and fire hazards.
- Instant alerts to authorities for emergencies.
- Low-cost, reliable, and scalable safety system.
- Improved passenger and worker safety in metro tunnels.

CONCLUSION

The **Metro Tunnel Safety Monitoring System using ESP32** provides a smart and cost-effective solution for ensuring safety in underground metro environments. By integrating multiple sensors with the ESP32 microcontroller, the system continuously monitors critical parameters like gas, smoke, temperature, and vibrations. Real-time data transmission and instant alerts help in quick emergency response, reducing the chances of accidents. This project not only enhances passenger and worker safety but also supports the development of modern, IoT-enabled smart metro infrastructure.

THANK YOU